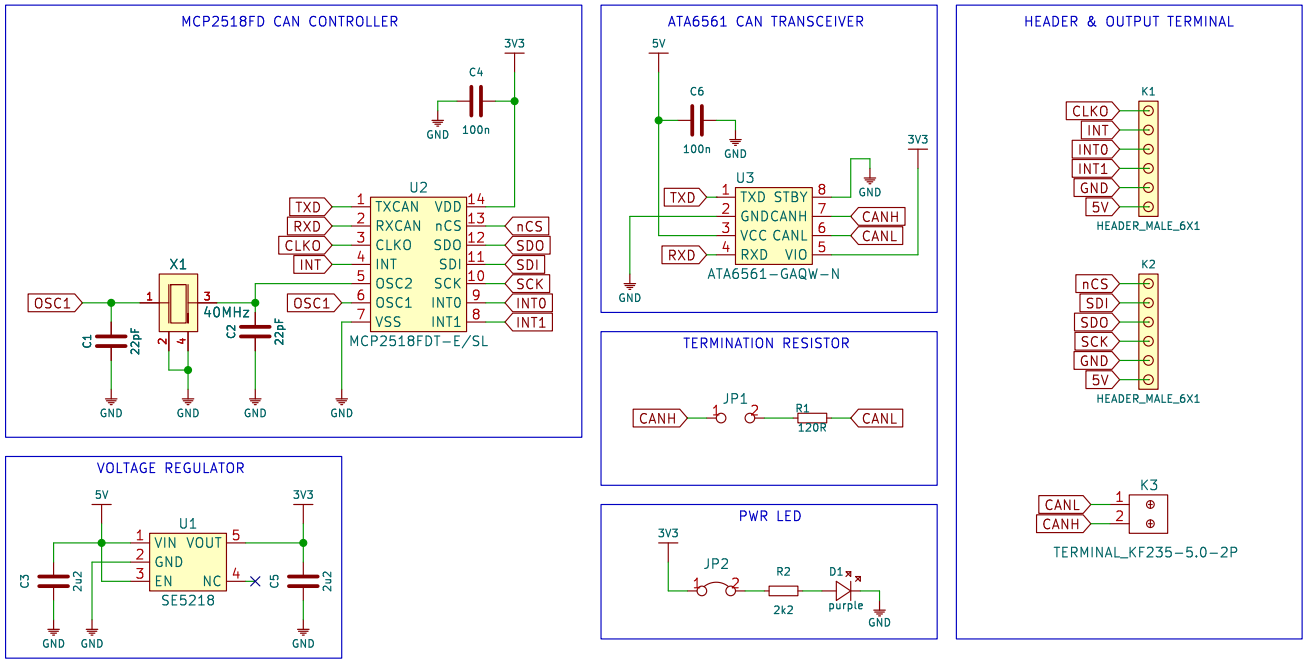

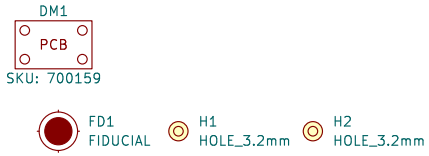

All Soldered products are available through soldered.com. Visit www.soldered.com/community for support.

CAN Transceiver MCP2518 board

SOLDERED

Version: v1.2.0.	Date: 2024-12-10	Sheet: 1/1	www.solde.red/333020